PERFORMANCE OF SINGLE LAYER STEEL BARREL VAULT UNDER BUCKLING

Mulesh K. Pathak (M. E. CASAD)

Lecturer in applied mechanic , Department government polytechnic, Valsad- 39600, Gujara, India

Abstract

Buckling is a critical state of stress and deformation, at which a slight disturbance causes a gross additional deformation, or perhaps a total structural failure of the part. Structural behavior of the part beyond 'buckling' is not evident from the normal arguments of static. Buckling failures do not depend on the strength of the material, but are a function of the component dimensions & modulus of elasticity. Therefore, materials with a high strength will buckle just as quickly as low strength ones. If a structure is subject to compressive loads, then a buckling analysis may be necessary. The study presented in this paper is intended to help designers of steel braced barrel vaults by identifying the significant differences in determining which configuration(s) would be best in different conditions of use. The study presented is of parametric type and covers several other important parameters like rise to span ratio, different boundary conditions, such that barrel vault acts as an arch, as a beam or as a shell, The buckling strength of a three different configuration of a double layer braced barrel vaults are presented in this paper for rise/span ratio varying from 0.2-0.7 and having four different types of boundary conditions. Through consideration of these parameters, the paper presents an assessment of the effect of the vault configuration on the overall buckling strength.

Keywords: *Buckling, Steel Barrel Vault, Single Layer*

----------***----------

1. INTRODUCTION

Barrel vaults are a popular way of spanning large open areas with few intermediate supports. The past four decades saw an expanding interest in this form of construction. This is understandable because these structures can provide a form of roof construction combining low cost and rapid erection with a pleasing appearance. Hundreds of successful barrel vault applications for basement, intermediary and ground floors now exist all over the world covering public halls, exhibition centre, aero plane hangers and many other buildings. This structure is usually used in all types of environment: urban, rural, plain, mountain or seaside[5].

Barrel vaults have been built with many different configurations involving different arrangements of longitudinal, transverse and bracing members including those sketched in Fig.1. Starting from the basic Configuration-1, bracing members can be placed in different orientations and with different intensities up to the most congested Configuration-4 for double layer barrel vault[3]. With every variation, it is expected that the performance of the vault would change, leading sometimes to advantageous improvements in the vault's strength/weight ratio, stiffness/weight ratio, failure mode, member stress distribution, material consumption, degree of redundancy, aesthetics and cost[6]

This paper presents the results of a parametric study to identify the effects of adopting different barrel vault configurations on the vault's buckling behavior. The study considers wide

variations of many important parameters including rise/span ratio, boundary conditions and configurations. The buckling strength of the vault structure is found out using the STAAD-PRO software. The data needed for the numerical analyses was generated using formex configuration processing, which is based on formex algebra principles[2].

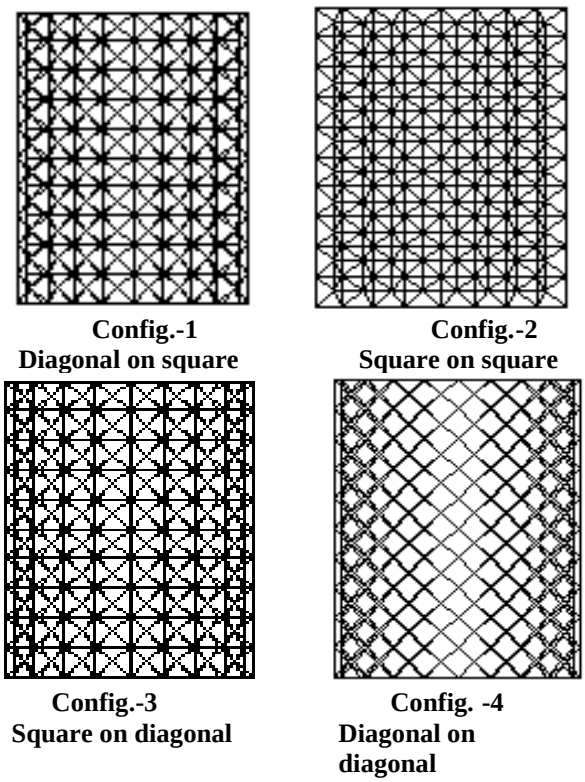

Fig-1:principal configurations of steel double layer braced barrel vaults

2 BUCKLING ANALYSIS

"Buckling" is used as a generic term to describe the strength of structures, generally under in-plane compressions and/or shear. It is particularly dangerous because it is a *catastrophic failure* that gives no warning. The buckling strength or capacity can take into account the internal redistribution of loads depending on the situation.

(A)Buckling capacity with allowance for redistribution of load

This defines the upper bound value of the buckling capacity and represents the maximum load the panel can carry without suffering major permanent set and is effectively the ultimate load carrying capacity of a panel. The buckling capacity is taken as the load that results in the first occurrence of membrane yield stress anywhere in the stiffened panel. The redistribution of load is a result of elastic buckling of component plates, such as the plating between the stiffeners. For slender structures the capacity calculated using this method is typically higher than the ideal elastic buckling stress (minimum Eigen-value).

(B)Buckling capacity with no allowance for redistribution of load

This defines the lower bound value of the buckling capacity. For slender structures, this is defined as the ideal elastic buckling stress. This is more conservative than the upper bound value given by Method 1 and ensures that the panel does not suffer large elastic deflections with consequent reduced in-plane stiffness.

Buckling loads are critical loads where certain types of structures become unstable. Each load has an associated buckled mode shape; this is the shape that the structure assumes in a buckled condition. There are two primary means to perform a buckling analysis:

2.1. Eigenvalue

Eigenvalue (bifurcation) buckling analysis is useful for finding the load factor and corresponding buckling shape for a given set of loads and constraints. Eigenvalue buckling analysis predicts the theoretical buckling strength of an ideal elastic structure. It computes the structural eigenvalues for the given system of loading and constraints. This is known as classical Euler buckling analysis. Buckling loads for several configurations are readily available from tabulated solutions[4]. However, in real-life, structural imperfections and nonlinearities prevent most real world structures from reaching their eigenvalue predicted buckling strength; i.e. it over-predicts the expected buckling loads.

2.2. Nonlinear

Nonlinear buckling analysis is more accurate than eigenvalue analysis because it employs non-linear, large-deflection; static analysis to predict buckling loads. Its mode of operation is very simple: it gradually increases the applied load until a load level is found whereby the structure becomes unstable (i.e. suddenly a very small increase in the load will cause very large deflections). The true non-linear nature of this analysis thus permits the modeling of geometric imperfections, load perturbations, material nonlinearities and gaps. For this type of analysis, small off-axis loads are necessary to initiate the desired buckling mode.

The lowest buckling load is of most practical significance, and is normally achieved when the tangent stiffness associated with a mode of deformation becomes zero, such a mode then referred to as the *buckling mode*. Of course, numerous sophisticated procedures and computational tools have been developed over the past few decades that deal with structural buckling, both in terms of simplified linear eigenvalue analysis and through tracing the geometrically nonlinear response as well as material nonlinearity. While the approach proposed in this paper does not deal with a new class of problem, it sheds new light on the buckling analysis of skeletal structures, enabling better understanding of the buckling mechanisms, and it provides a simplified and practical framework for buckling predictions, importantly, using linear analysis principles.

As mentioned above, buckling can be related to the singularity of the tangent stiffness matrix, which in turn consists of two parts. The first part is the *material stiffness matrix* which is related to the deformational stiffness of the components, taking into account the connectivity of components in the current geometric configuration of the structure. For linear elastic components, the material stiffness is identical to the linear elastic stiffness, but updating the structural geometry to include the effect of any displacements.

The second part is the *geometric stiffness matrix*, which is related to the component forces, and in some cases to the applied loading, taking into account the effect of a *change* in geometry from the current configuration. For typical structures, the material stiffness is positive for all deformation modes, mathematically referred to as positive-definite, whereas the geometric stiffness can admit negative values for certain modes, depending on the component forces and applied loading. It is therefore the effect of a negative geometric stiffness that can lead to a singular overall tangent stiffness matrix, and hence buckling.Buckling Equations:

$$\Sigma M = 0 \qquad (1)$$

M = F u = internal bending moment. Can be replaced with the corresponding stiffness, [K] {u}

$$Ku - Fu = 0; \qquad (2)$$

$$[K - F]\{u\} = 0 \qquad (3)$$

In general, this equation is written as:

$$[K + \lambda K_g]\{u\} = 0 \text{(Eigen-problem)} \qquad (4)$$

K_g = geometric stiffness matrix, which expresses the influence of the location of the load on the stiffness of the structure.

Where, K and K_g are the stiffness and geometric stiffness matrices respectively, u is the nodal displacement sector, which represents the buckling mode shapes, and λ is the load factor, when multiplying the referenced applied load, gives the buckling load.

The present study examines the underlying assumptions within the formulation of the eigenvalue buckling method in order to highlight the problem types that most readily lend themselves to solution by this method. In addition, problems presenting responses that violate these fundamental assumptions are also examined. If the maximum stress is significantly less than yield stress, and the buckling load factor (BLF) is greater than 1.0, then buckling will probably not occur. If however the BLF is less than 1.0, then the buckling analysis will be linear provided that the maximum stress is far below yield stress.
Convergence Tolerance in STAAD-Pro 2007:

STAAD solves for the eigenvalue-eigenvectors pairs using an accelerated subspace iteration algorithm. During the solution phase, the program prints the approximate eigenvalues after each iteration. As the eigenvectors converge, they are removed from the subspace and new approximate vectors are introduced. For details of the algorithm, see Wilson and Tetsuji (1983).

Each eigenvalue-eigenvector pair is called a natural vibration mode of the structure. The modes are identified by numbers from 1 to n in the order in which the modes are found by the program.

3 PARAMETRIC STUDY

In the present paper, three parameters, which are having highest influence on the buckling performance of the vault, are considered. These parameters are as follows:

(1) Vault configuration: The double layer barrel vault of three most popular configurations, which are used by majority of the designer, who designs the vault structures, is taken as one parameter. Diagonal on square (DOS), Square on square (SOS) and Square on diagonal (SOD) of configurations of double layer barrel vault are taken in the study. All three types of configurations are shown in fig.-1.

(2) Rise/span ratio: This is also important parameters for any arch type of structure. From the literature, it is that, it is varied from 0.2 to 0.7. This parameter is varied from 0.2 to 0.5 in the interval of 0.05, and its effect on the buckling performance is presented in this paper.

(3) Boundary conditions: This is one of the important parameters for any structure from the stability point of view. In addition to that, boundary conditions are also effect the buckling performance of the structures. In the present paper, boundary conditions are decided in such way that, vault is act as an arch, a beam or a shell. Thus four different types of support conditions are considered and is shown in fig.-2

Thus in the present paper, parametric study of the buckling performance of three different configuration of double layer barrel vault, with rise/span ratio varied from 0.2 to 0.7 in the interval of 0.05 and having four different types of support conditions are presented, which will be useful to the designer of a barrel vaults.

4 PROBLEM DESCRIPTION

The parametric study is carried out on a problem of barrel vault, whose plan area is 40 m x 30 m. The vault is having an arch of 40 m. and length of 30 m. The rise of the vault is taken as per rise/span ratio, which is one of the parameters in this study, whose value is varied from 0.2 to 0.7 in the interval of 0.05. The galvanized steel sheet is used as roofing cover

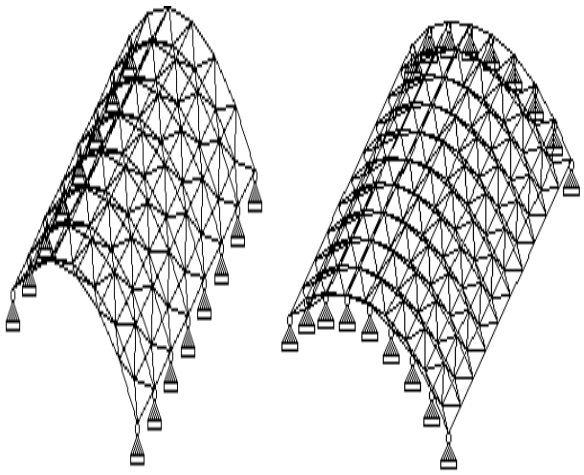

(A) Arch Vault (B) beam vault

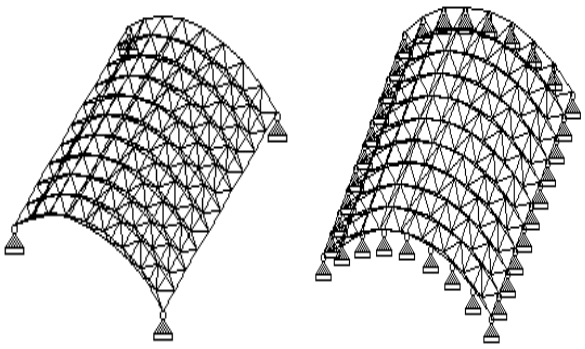

(C) corner supp. D) all edges supp. shell vault shell vault

Fig-2:different boundary conditions considered in buckling analysis barrel vault

Three different configuration of double layer barrel vault as mentioned in para 3.0 with four boundary conditions are considered with the vault acting as an arch (supported along transverse edge), a beam (supported along longitudinal edge), a corner supported shell or a shell supported on all edges[5]. For analysis purpose, the vault is divided in 10 transverse panels

and 8 longitudinal panels. The data needed for the structural analyses is generated using formian programming language[7], which is a convenient medium for formex configuration processing.

4.1 Loads

The following loads are considered:
Dead load: The dead load includes self weight of the structure and the weight of the roof covering materials. Galvanized Steel Sheets are used for roofing.
Live load: The live load depends upon rise/span ratio and it is calculated as per table-2 of IS-875 (Part-II).The dead and live load are applied as area load.
Wind load: Wind load is the most important of all and it often controls the design. The Wind load is calculated as per IS: 875–1987(Part-III). ,
As per Indian code,Design For wind Load $V_z = V_b*K_1*K_2*K_3$
Where Vz is the design wind speed at any height in m/s;

. K1 is risk coefficient=1.06 for this case (table-1 IS: 875 Part-3); K2 is terrain, height and structure size factor = 0.76 for cat.4 and class B case (table-2 IS: 875 Part-3);K_3 = topography factor =1 for this case.So, Vz = 31.4184 m/s

Design Wind Pressure $P_d = 0.6\ V_z^2 = 592.2695\ N/m^2$
Wind force $F = (C_{pe}-C_{pi})*A*P_d$
Where, C_{pe} = External pressure coefficient and C_{pi} = Internal pressure coefficient. The external pressure coefficient C_{pe} is taken considering the case of roof on elevated structure as per table-15 of IS: 875,Part-III (fig.3).In the table15 of IS-875 values of external pressure coefficients are given at interval of 0.1 of H/l ratio. The Excel sheet is used for calculation of the intermediate values of C_p by linear interpolation. Internal pressure coefficient is based on the permeability of structure and in this problem, it taken as ±0.2. In this case surface design pressure varies with height, the surface areas of the structural element may be sub-divided so that the specified pressures are taken over appropriate areas. Here the total height of the structure was divided into ten equal parts and wind force per sq.m area was calculated using Excel sheet. Positive wind load indicates the force acting towards the structural element (pressure) and negative away from it (suction).

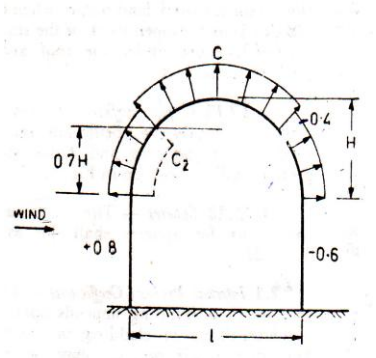

Fig-3:wind pressure distribution for roof on elevated structure as per is: 875(part-3)

Four wind load cases were considered

(a) Wind load parallel to ridge with C_{pi}= 0.2
(b) Wind load parallel to ridge with C_{pi}= -0.2
(c) Wind load perpendicular to ridge with C_{pi}= 0.2
(d) Wind load perpendicular to ridge with C_{pi}= -0.2

The wind load was applied as concentrated loads on the nodes of a barrel vault. Determination of wind force on the curved surface of the barrel vault is complex task and hence in-house computer program is prepared to calculate wind force at each node of the structure. The nodal loads are determined by calculating the area surrounding each node, and multiplying this area by the total factored load. The Excel sheet is used for the calculation of nodal load. This process was repeated for each configuration with a different rise/span ratio and boundary condition.

Following load cases and load combinations are considered in the analysis.
(1) Dead load
(2) Live load
(3) Wind load parallel to ridge (C_{pi}= -0.2)
(4) Wind load parallel to ridge (C_{pi}= 0.2)
(5) Wind load perpendicular to ridge (C_{pi}= -0.2)
(6) Wind load perpendicular to ridge (C_{pi}= 0.2)
(7) Dead load + Live load
(8) Dead load + Wind load parallel to ridge (C_{pi}= -0.2)
(9) Dead load + Wind load parallel to ridge (C_{pi}= 0.2)
(10) Dead load + Wind load perpendicular to ridge (C_{pi}= -0.2)
(11) Dead load + Wind load perpendicular to ridge (C_{pi}= 0.2)
(12) Dead load + Live load + Wind load parallel to ridge (C_{pi}= -0.2)
(13) Dead load + Live load + Wind load parallel to ridge (C_{pi}=0.2)
(14) Dead load + Live load + Wind load perpendicular to ridge (C_{pi}=-0.2)
(15) Dead load + Live load + Wind load perpendicular to ridge (C_{pi}=0.2)

4.2 Buckling Analysis

Based on the basic loads and load combinations, loads at each joint of the vault geometry are calculated. The structure is modeled as space truss and accordingly static analysis is carried out using software. The preliminary analysis & design is carried out using professional software STAAD-Pro. All required checks of IS: 800-1984 are being taken care in the design. To get the optimum sections, the facilities given in the STAAD-Pro are also exploited.

H/l	C	C2
0.1	-0.8	-0.8
0.2	-0.9	-0.7
0.3	-1.0	-0.3
0.4	-1.1	+0.4
0.5	-1.2	+0.7

From an analysis point of view, a buckling analysis is used to find the lowest multiplication factor for the load that will make a structure buckle. The result of such an analysis is a number of buckling load factors (BLF). The first BLF (the lowest factor) is always the one of interest. If it is less than unity, then buckling will occur due to the load being

applied to the structure. The analysis is also used to find the shape of the buckled structure. Here buckling analysis is done using STAAD-Pro 2007 and the variation of first B.F. (i.e. in mode 1) with rise/span ratio is represented in fig.3.

5 CONCLUSION

1 Double Layer Barrel vault configurations that seem to offer the best overall performance are those that have a regular and symmetrical arrangement of longitudinal and transverse members in all the directions in addition to strengthened edges for example Config.-2 (SOS) offers the best buckling load capacity approx. more than four times that of Config.-1(DOS), Config.-3(SOD) and Cofig.-4(DOD)

2 In arch and all edges supported shell boundary conditions Config.-3(SOD) offers less buckling load capacity than Config.-1(DOS) but in beam and corner supported shell boundary conditions it offers more buckling load capacity than config.-1(DOS).

3 Loss of buckling load capacity with increase in Rise to Span ratio is least in regular and symmetrical config.-2(SOS).
4 In config.1 (DOS) loss of buckling load capacity with increase in Rise/Span ratio is more than config.-3(SOD) except in case of arch boundary condition.

5. Config.-2 (SOS) that have a regular and symmetrical arrangement of longitudinal and transverse members in all the directions offers less buckling strength capacity in arch boundary condition than beam boundary condition , while config.1 (DOS) and config.-3(SOD) offers more buckling strength capacity in arch boundary condition than beam boundary condition.

6. Without internal longitudinal or transverse members, the buckling behavior of barrel vaults is highly affected especially when acting in the beam mode or in the shell or arch mode respectively, i.e. Config. – 4(DOD)

7. In beam boundary condition rate of buckling strength with increase in Rise/Span ratio is least between all the four boundary conditions, while in arch boundary condition rate of buckling strength with increase in Rise/Span ratio is maximum between all the four boundary conditions.

REFERENCES

[1]Makowski, Z S (1985), “Analysis, Design and Construction of Braced Barrel Vaults”, Elsevier Applied Science Publishers, London.
[2]Hoshyar Nooshin and Peter Disney(August 2002),”Formex Configuration Processing ” , Multi-science Publishing Co. Ltd.,
[3]Ramaswamy G.S. and M. Eekhout (1999) , ”Analysis, Design and Construction of Steel Space Frame”, Telford Publication, U.K.,
[4]N.Subramanian (1999),”Principles of Space Structures”, Wheeler Publishing, New Delhi.
[5]Ahmed El-Sheikh(2001),” Performance of Single-layer Barrel Vaults with Different Configurations”, International Journal of Space Structures Vol.16 No.2
[5]Ahmed El-Sheikh(2002),” Effect of Geometric Imperfections on Single- Layer Barrel Vaults” International Journal of Space Structures Vol.17 No.4
[6]Nooshin, H, Disney, P and Yamamoto, C (1993), “Formian: The Programming Language of Formex Algebra”, University of Surrey Publication

Table-1:variation of buckling factor with rise to span ratio

BUCKLING FACTOR FOR DIFF. BOUNDRY COND. FOR DOUBLE LAYER BARREL VAULT																
H/S	ARCH				BEAM				SHELL CORNER SUPP.				SHELL ALL EDGES SUPP.			
	DOS	SOS	SOD	DOD	DOS	SOS	SOD	DOD	DOS	SOS	SOD	DOD	DOS	SOS	SOD	DOD
0.20	1.22	5.76	1.02	1.20	0.61	6.20	0.68	0.37	0.21	1.82	0.30	0.12	6.19	20.59	1.51	1.24
0.25	0.64	4.36	0.48	0.62	0.53	5.06	0.52	0.28	0.12	1.44	0.21	0.08	3.27	15.85	1.11	0.96
0.30	0.36	3.30	0.23	0.35	0.46	4.42	0.43	0.24	0.08	1.17	0.17	0.06	2.05	12.56	0.85	0.77
0.35	0.21	2.47	0.12	0.21	0.39	4.11	0.38	0.22	0.05	0.97	0.15	0.05	1.47	10.15	0.63	0.61
40	0.12	1.82	0.06	0.13	0.17	4.03	0.29	0.20	0.03	0.81	0.11	0.04	1.02	8.31	0.48	0.47
0.45	0.07	1.31	0.04	0.08	0.25	4.19	0.31	0.19	0.02	0.67	0.07	0.03	0.99	6.87	0.39	0.35
0.50	0.04	0.92	0.02	0.05	0.20	4.49	0.33	0.17	0.01	0.54	0.03	0.02	0.89	5.72	0.31	0.27
0.55	0.03	0.65	0.01	0.03	0.18	5.36	0.33	0.15	0.01	0.43	0.02	0.02	0.90	5.03	0.25	0.20
0.60	0.02	0.44	0.01	0.02	0.15	5.26	0.26	0.12	0.01	0.48	0.01	0.02	0.91	4.30	0.20	0.15
0.65	0.01	0.29	0.00	0.01	0.12	4.39	0.21	0.09	0.01	0.15	0.01	0.01	0.97	3.53	0.16	0.11
0.70	0.01	0.18	0.00	0.01	0.07	3.57	0.25	0.06	0.00	0.09	0.00	0.01	0.71	2.86	0.14	0.08